Oral Presentation 1: Subsystem F inside an SDR

Team 4
Leo Stewart, Muhammad Waquas, Mayan Saravanabavan

Subsystem F Addresses Two Main Failures of an SDR

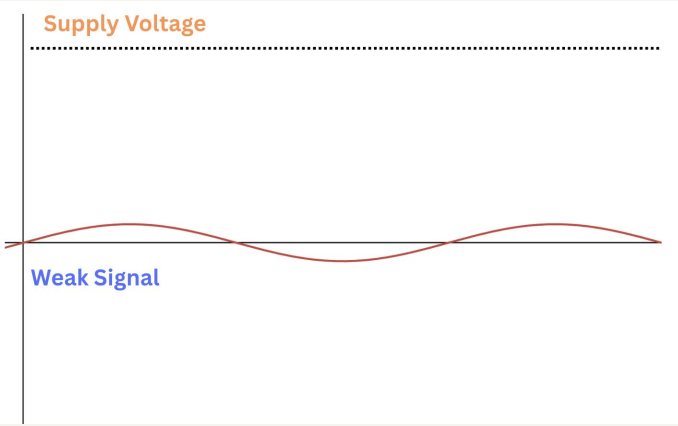

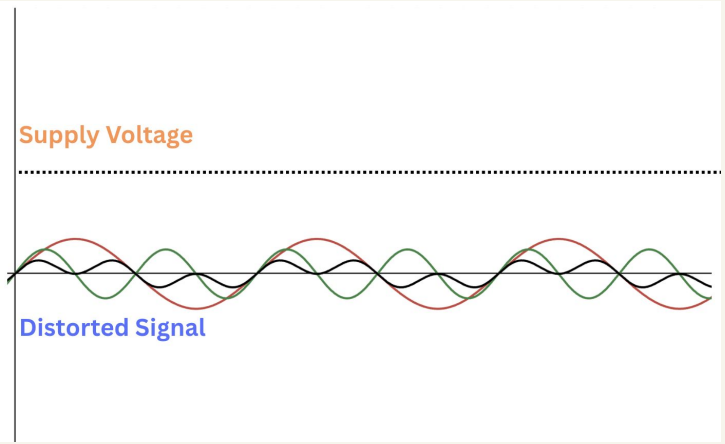

Failure A:
Signal too weak

Failure B:
Signal too messy

The Subsystem F Components: Power Amplifier + Signal Filter + TXEN Enable mechanism work to eliminate these failures.

[1]

Power Amplifier Operation in an SDR

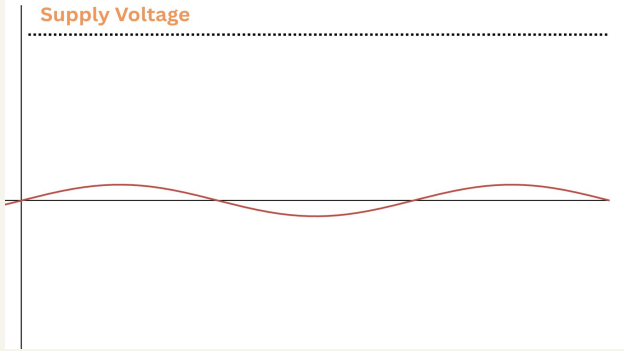

TX Power Amplifier

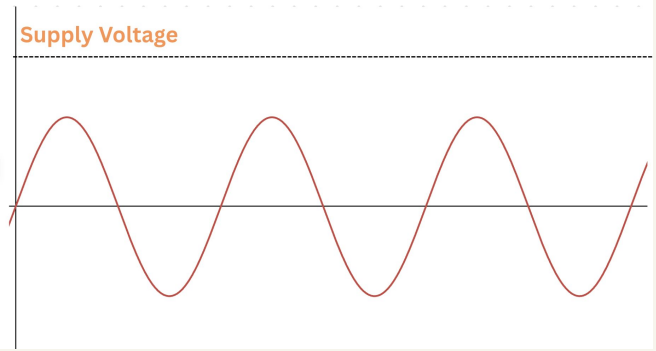

Before Amplification: Weak Signal & Low Power

After Amplification: Strong Signal & High Power

- A desired signal is produced by the radio's subsystem E and feeds it into Subsystem F to prepare for transmission.

- The power amplifier takes the desired signal and amplifies to a power of 1-10 Watts across a 50 Ohm load.

- The intended output signal is kept within a 8-16 Mhz frequency range.

[1]

Low Pass Filter: Making the Signal Cleaner

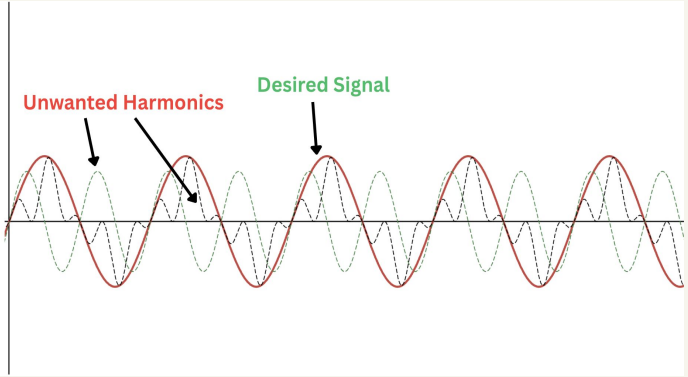

Low Pass Filter

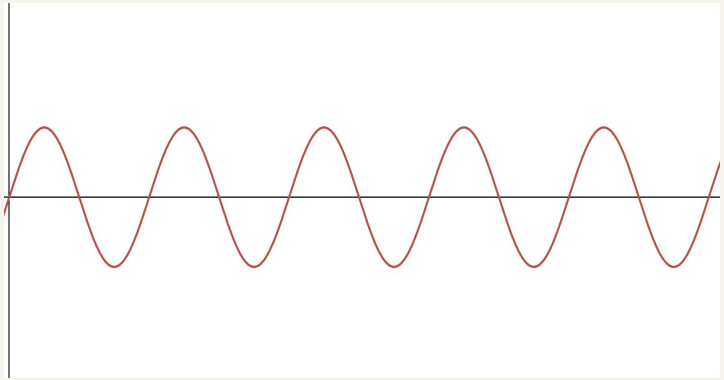

Before Filtering: Distorted Signal

After Filtering: Clean Signal

Harmonic: Harmonics are signal components which operate at different frequencies of the desired output frequency.

- When a signal is amplified, additional unwanted parts known as harmonics can be produced causing unwanted emissions.

- The lowpass filter included in Subsystem F works to attenuate the unwanted harmonics while letting the desired amplified signal of 8-16 MHz pass.

[1]

TXEN Signal: Controlling the Subsystem

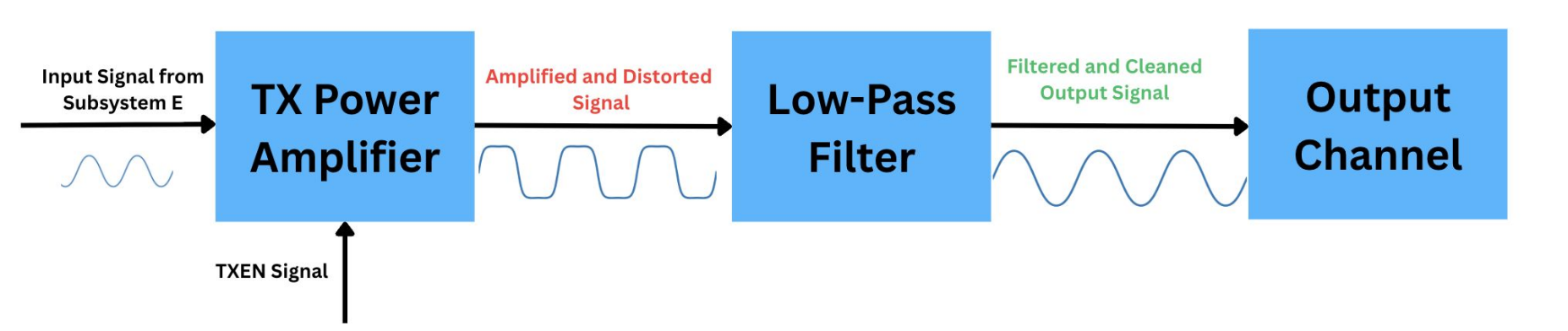

- The TX PA and filter are controlled by the the TXEN signal, generated in Subsystem C.

- The TXEN signal synchronizes Subsystem F operation, with the radios receiving (RX) and transmission (TX) states [1].

- Controlling the PA with TXEN saves power and stops the radio from sending unintended output signals.

TXEN Signal	Power Amplifier
TXEN = 3.3	OFF
TXEN = 0	ON

[1]

Subsystem F inside the SDR

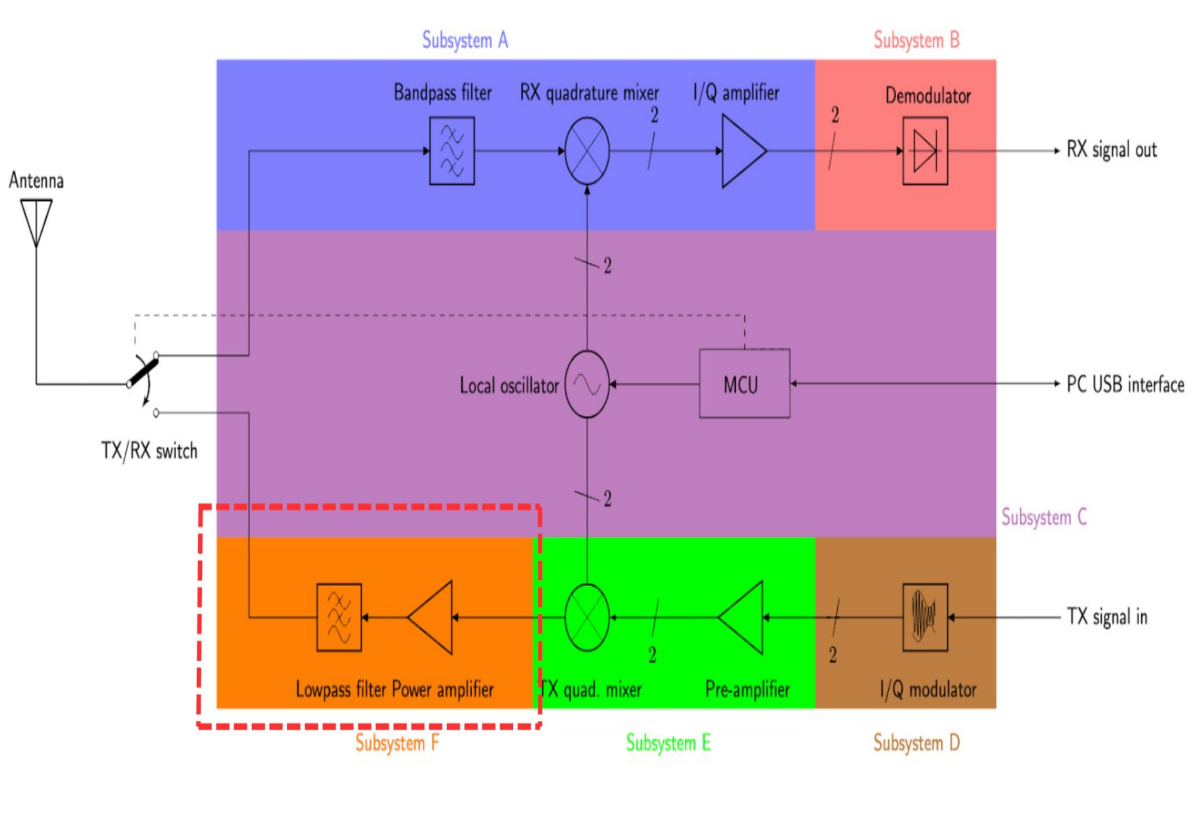

Subsystem F interacts with the following Subsystems:

Subsystem E: Provides the initial output waveform to F as PA_IN_P and PA_IN_N

Subsystem C: Provides the TXEN signal for F.

Antenna/50 Ohm Load: Subsystem F delivers the signal to the output path as PA_OUT.

Class D Power Amplifier Design

Power Amplifier Design Architecture

The Power Amplifier architecture is class D, and includes the following components:

Voltage Driver (Comparator) + **Current Driver** + **Mosfet Switch (Amplifier)**

Controlled by TXEN Signal

Class D Tradeoffs:

Efficiency Vs. Distortion

- Class D amplifiers operate a **high efficiency**, being able to deliver high power outputs like the 1-10W power delivery requirement.
- The Tradeoff of the high efficiency means the amplified signals contain unwanted harmonics.

LTC6752 Comparator: The Amplifier Switch

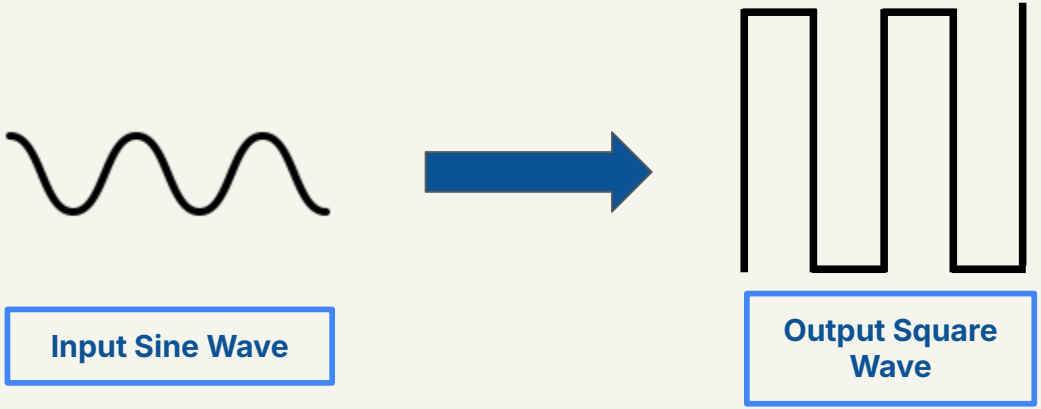

LTC6752 Comparator:

- Converts the 0.5 V sinusoidal input into a clean 0-5V digital pulse
- Needed for a Class D Power Amplifier
- Enables the IRF510 MOSFET to operate as a switch (ON/OFF)
- Reduces inefficient operation by favoring fast transitions between ON and OFF states

Why the LTC6752 Comparator?

Compared to alternatives this part is:	Result
Extremely High speed	It can keep up with our fast radio signal, so the amplifier receives a clear switching command.
Low Propagation Delay	It creates sharper ON/OFF transitions, which helps the amplifier switch more cleanly.
More Efficient (Less power loss)	Less energy is wasted during switching, which helps reduce unnecessary power loss and heat.
Designed for High-Frequency Timing	The output pulse timing is consistent, which helps the transmit signal behave more reliably.

MCP14AO602 Gate Driver: Powering the Mosfet

- In order to turn the MOSFET ON we need to apply a current at the gate.
- The MOSFET gate is very “heavy” (8nC - 12nC) for the comparator.
- We need to be able to supply that charge instantly (within ns) in order to run at high frequencies
- Comparator has a low current rating and cannot fulfill these requirements.
  - It’s too “small / weak” to power the gate
- Amplify the current of the comparator so that it is strong enough to power the gate and turn the MOSFET on.
  - Use an **MCP14O602 Gate Driver.**

MCP14AO602 Gate Driver: Features

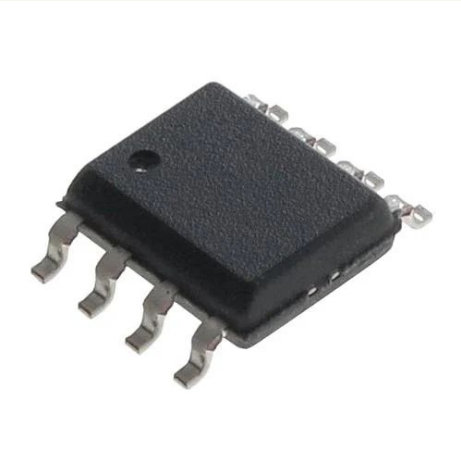

- We require **1.5-3A**, as this will allow us to switch between the ON and OFF state within **2-5ns**.
- MCP14A0602 can give up to **6A of peak current.**
- Also comes with an **EN pin** allowing us to turn the current driver ON and OFF when we like (TXEN).

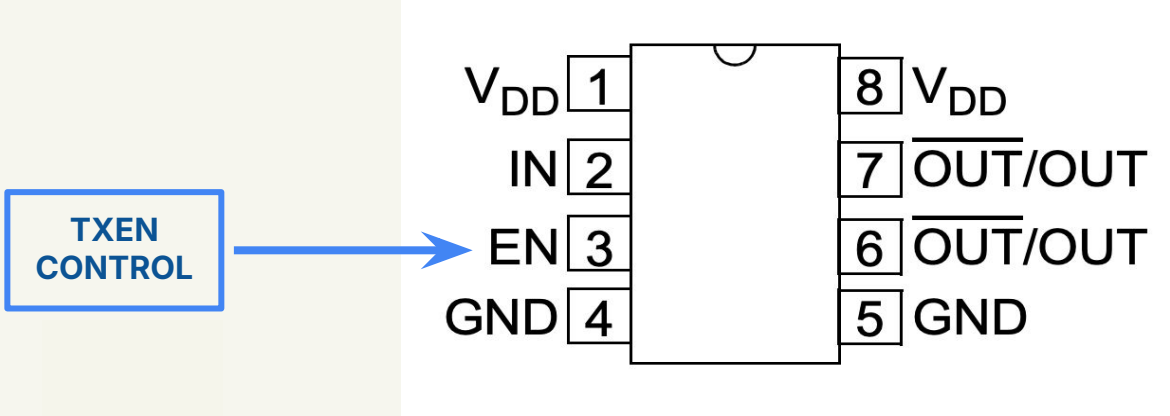

MCP14AO602 vs. Alternatives

Pros of MCP14AO602:

- High Peak Output Current
- Fast rise/fall time (~10 ns)
- Compatible with 8–16 MHz timing needs
- Accepts 12V input

The MCP14AO602 beats other designs with its high peak current and fast rise/fall time.

The MCP14AO602 is compatible with the current design requirements.

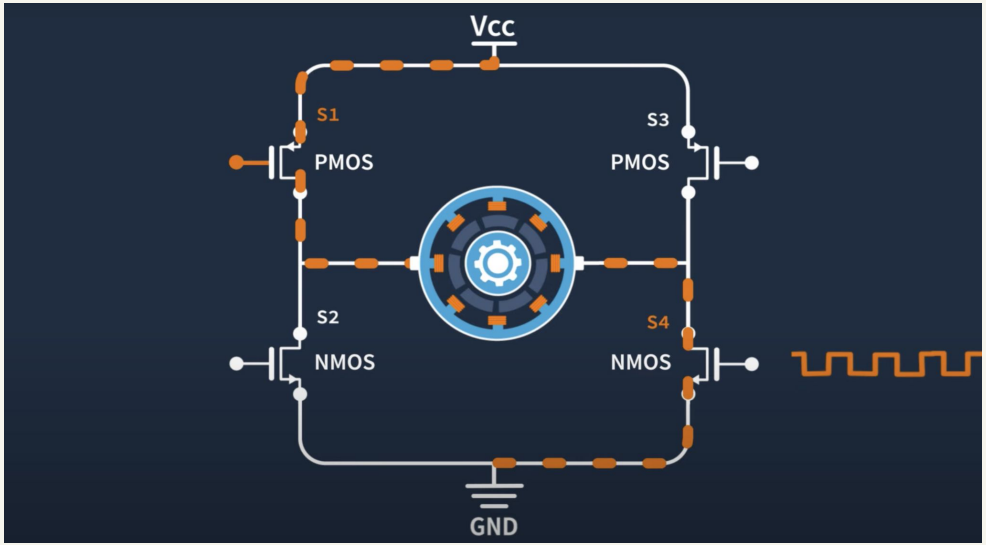

H-Bridge Driver:

- Requires Double Ended Inputs, incompatible with our design topology.

IRF510 MOSFET: The Amplifier Switch

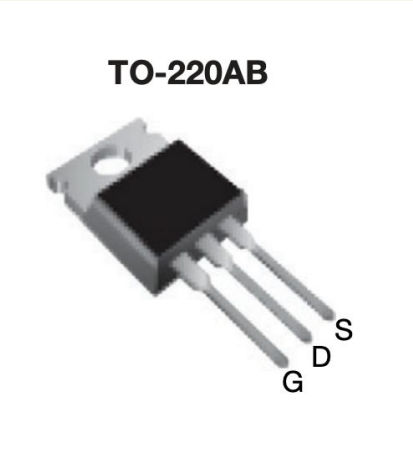

Why The IRF510?

1) **Low input capacitance** making it easy for the current driver

2) **Low output capacitance** providing efficiency (less power wasted)

3) High **current capacity** (5.6A) this is more than enough for 10W

4) **High voltage drain to source** (Vds can go up to 100V)
   a) Important for the flyback effect

5) Extremely **cheap** compared to high frequency MOSFETs

6) Mosfet packaging allows for **thermal management**

IRF510 MOSFET vs. Alternatives

Alternatives

1. **Logical Level Mosfets**
   Low voltage headrooms, and high capacitances.

2. **Dedicated RF Mosfets**
   Very expensive, and highly complex requiring extra circuitry.

3. **High-Power SiC/GaN MOSFET**
   Expensive, and have poor thermal management.

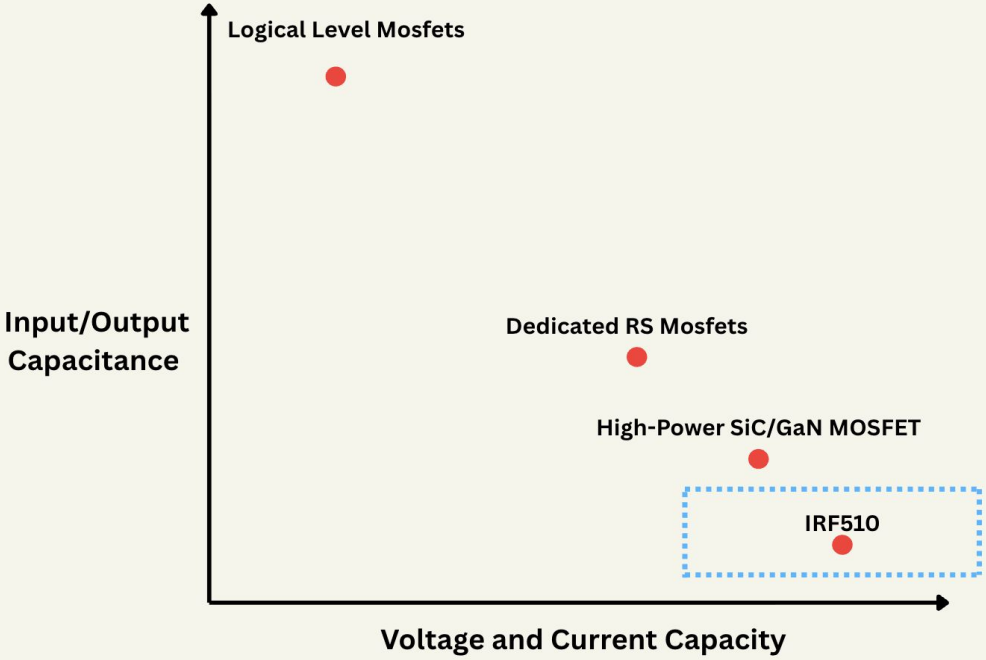

Bringing It All Together: Class D Amplifier

Voltage Driver

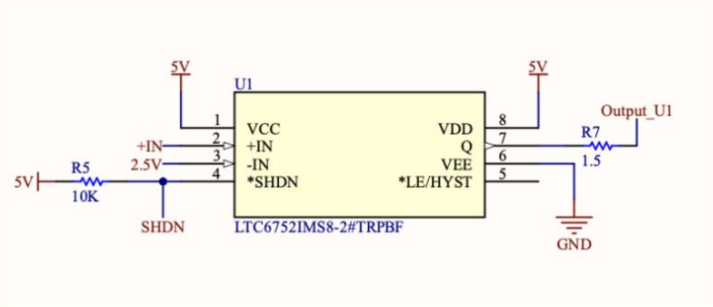

Gate Driver

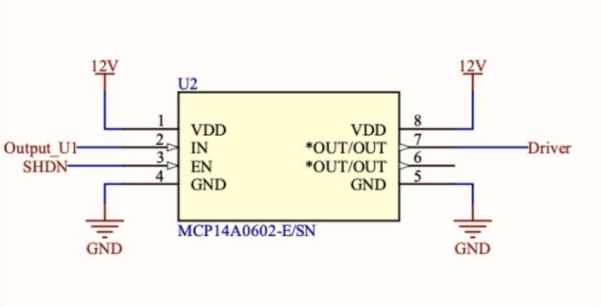

Mosfet Amplifier

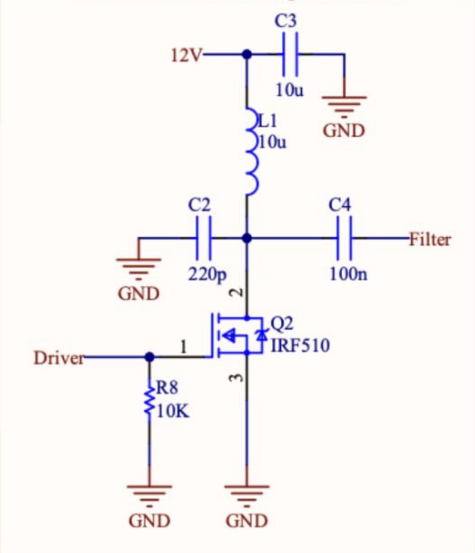

Requirement	Outcome
1-10W Power Output	MEETS
Uses Subsystem E Output	MEETS
Connects to 5V and 12V Power Supply	MEETS
Controlled by TXEN Signal	MEETS

Low Pass Filter Design

The Low Pass Filter: Reducing THD

The Filter's Job:

- Attenuate the unwanted harmonics
- Allow the desired amplified signal of 8-16 MHz pass through to the 50 Ω load

- **Requirement:** THD < 10% at 14 MHz input
- $THD = (\sqrt{(V_2^2 + V_3^2 + V_4^2 + \ldots + V_n^2)} / V_1) \cdot 100\%$

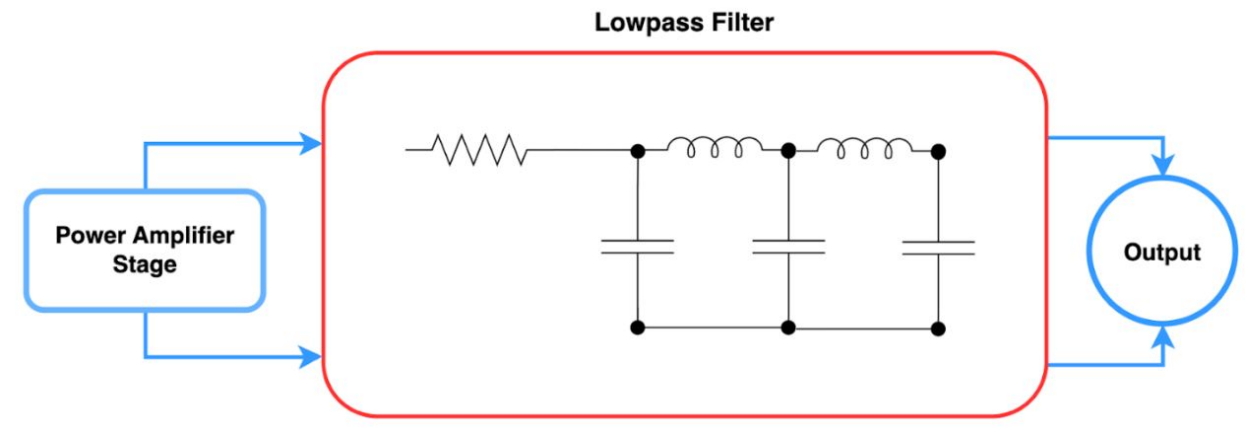

Comparing Filter Types

Filter Type	Passband	Roll-off
Maximally Flat (Butterworth)	Flat	Moderate
Equi-Ripple (Chebyshev)	Ripple in passband	Steepest
Linear Phase (Bessel)	Linear phase response	Gentlest

Different filter types make different tradeoffs between passband flatness and roll-off steepness.

For the SDR, we prioritized equal attenuation across the 8-16 MHz passband while still providing sufficient harmonic rejection.

- This is why we selected a Butterworth (maximally flat) response.

5th-Order Filter with Impedance Matching

Filter transitions from ~7.5 Ω to 50 Ω using Butterworth prototype values (g_1–g_5):

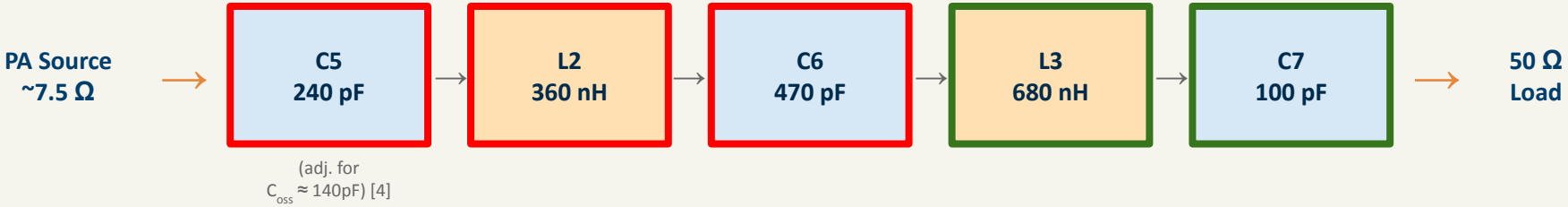

= Shunt Capacitor = Series Inductor

- **Stage 1 (C5, L2, C6):**
  - Handles bulk of impedance matching from 7.5 Ω to 50 Ω
- **Stage 2 (L3, C7):**
  - Final smoothing to 50 Ω
  - Suppresses 2nd/3rd harmonics (28 MHz, 42 MHz)
- **Why choose a 5th-order filter?**
  - Steeper roll-off than 3rd-order → stronger harmonic suppression → lower THD

Bringing It All Together: Low Pass Filter

5th-order Butterworth LPF (C-L-C-L-C)

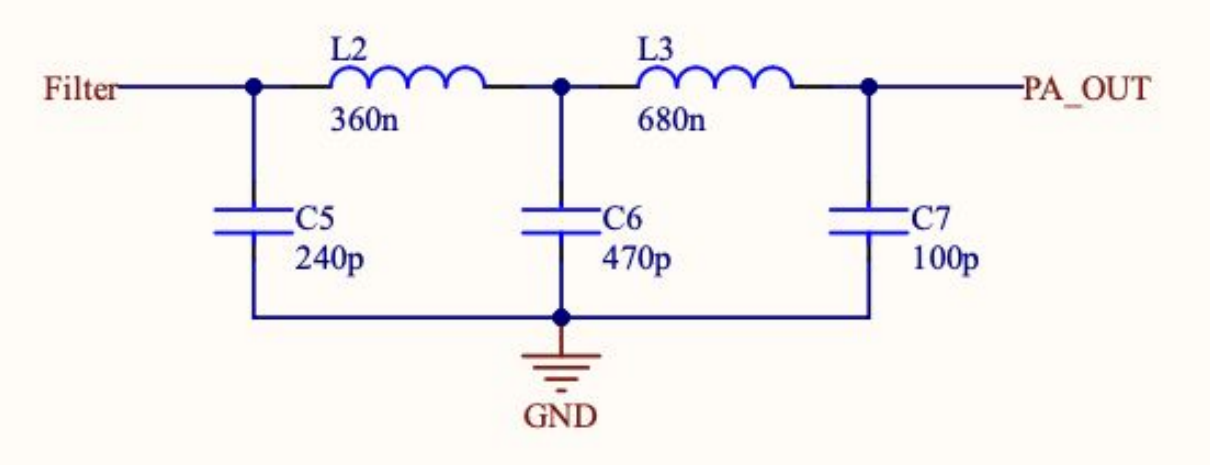

Requirement	Target	Simulated Result	Outcome
THD (14 MHz)	< 10%	1.23%	**MEETS**
Power Range (8–16 MHz)	1–10 W	4.9 – 9.6 W	**MEETS**

Design Evolution: WD1 → M1

WD1 Proposal (Initial)

Current Driver: Discrete Totem Pole (BJT)

Enable Control: AND Gate on signal path

Filter: 3rd-order Butterworth LPF

Impedance Matching: Not integrated

Voltage Driver: Conceptual (Schmitt Trigger)

→

M1 Design (Current)

Current Driver: MCP14A0602

Enable Control: 2N3904

Filter: 5th-order Butterworth LPF

Impedance Matching: Integrated (7.5 Ω → 50 Ω)

Voltage Driver: LTC6752-2

Next Steps and Anticipated Challenges

Next Steps

1. PCB Layout & Routing
Complete layout within 50.8 × 90.2 mm

2. Part Ordering
Finalize curated list of parts for part ordering.

3. Hardware Assembly & Soldering
Populate and solder all components

4. Bench Testing (per WD1 Test Procedures)
Power output, THD, TXEN verification

Anticipated Challenges

Thermal Management
IRF510 dissipates heat at high power. Heatsink placement on small PCB will be critical

Parasitic Effects
Real PCB traces add inductance/capacitance that may shift filter response

Key Takeaway

Subsystem F addresses two core problems: the transmitted signal must be powerful enough and clean enough for reliable communication.

Our design solves this in three stages:

Amplify

Class D PA with IRF510 MOSFET, LTC6752 comparator, and MCP14A0602 gate driver delivers 4.9-9.6 W across 8-16 MHz

Clean

5th-order Butterworth LPF attenuates harmonics while maintaining uniform gain. 1.23% THD at 14 MHz

Control

TXEN enable circuit using 2N3904 disables PA during receive. Output drops to ±5 pV

Thank You

References

[1] S. V. Hum, “ECE295 – FLRTRX ICD v5.0.0,” University of Toronto, course document (PDF), n.d.

[2]“LTC6752/LTC6752-DataSheet,” Mouser.ca, 2015. https://www.mouser.ca/datasheet/3/1014/1/6752fc.pdf (accessed Feb. 23, 2026).

[3]“MCP14A0601/2 Features,” Microchip, 2016. Accessed: Feb. 22, 2026. [Online]. Available: https://ww1.microchip.com/downloads/aemDocuments/documents/OTH/ProductDocuments/DataSheets/20005593A.pdf

[4]“IRF510 Power MOSFET TO-220AB ORDERING INFORMATION INFORMATION,” Vishay Siliconix. Accessed: Feb. 22, 2026. [Online]. Available: https://www.vishay.com/docs/91015/irf510.pdf

[5] S. V. Hum, “FL1: Lowpass Filter Design,” University of Toronto, course document (PDF), n.d.